PZ MEDICAL
品臻影像

3025Z

Enlighten The World

Stable

Efficient

Innovative

The 3025Z is a 29x25cm (12x10 inch) high -performance dynamic FPD; in many application, the performance can meet the requirements. The detector has excellent image quality, high dynamic range and high frame rate. It can be applied to different fields including dental CBCT, C arm, and industrial X-ray flaw detection. Provide the synchronization signals and SDK interfaces, can be easily connected to and synchronized with the generators and other components in the X-ray system.

Address:5F,Building13,2SuideRoad,PutuoDistrivt,Shanghai,China
+86-2160136588
www.pzmedical.com

Technical Parameter

Detector Technology	a-Si
Scintillator	CsI
Image Size	29×25cm（12×10in）
Pixels Matrix	2048×1792
Pixel Pitch	139μm
A/D Conversion	16bit
Maximum Linear Dose	110μGy
Minimum Detectable Dose	14nGy
Spatial Resolution	3.6LP/mm
Frame rate（1×1）	10fps
Frame rate（2×2）	30fps
X-ray Voltage Range	40-150KV
Adapter Output	DC 24V,60W
Adapter Input	AC100-240V,50-60Hz
Power Dissipation	15W
Data Interface	GigE
Detector Weight	2.0±0.3kg
Dimensions	31.5×27.8×1.9cm
Water tightness	IPX3
Detector Housing Material	Carbon, Alloy
Operating Environment	5-35℃,10-75% RH

Outline Drawing

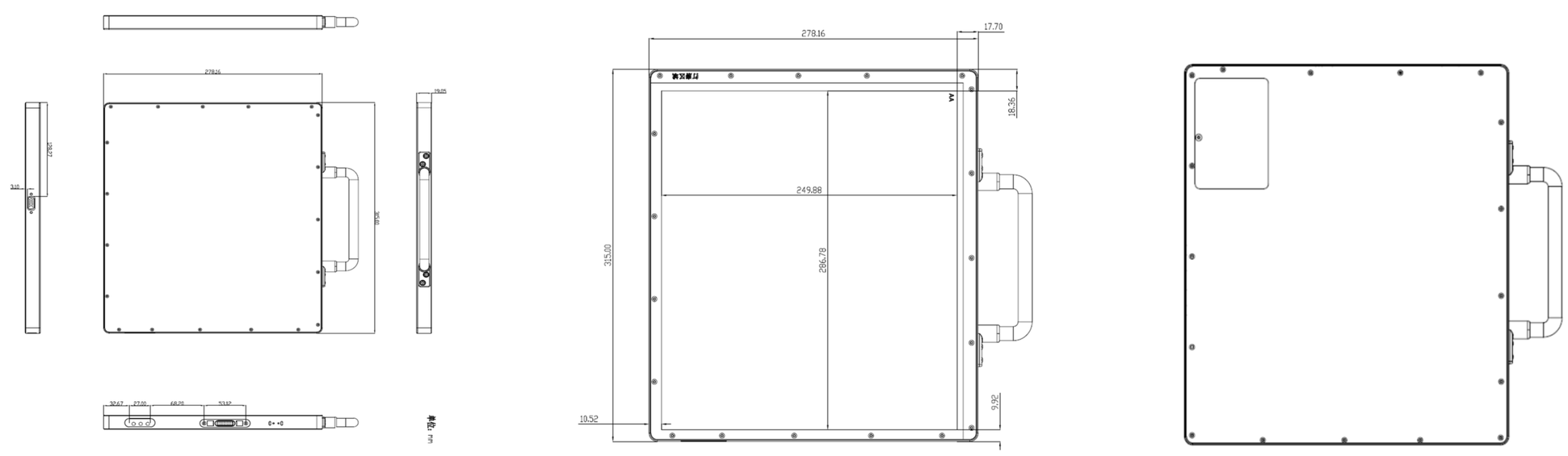

Address:5F,Building13,2SuideRoad,PutuoDistrivt,Shanghai,China
+86-2160136588
www.pzmedical.com